AQUA CUTTER

710V XL

FOLLOW THE LARGER FOOTPRINTS

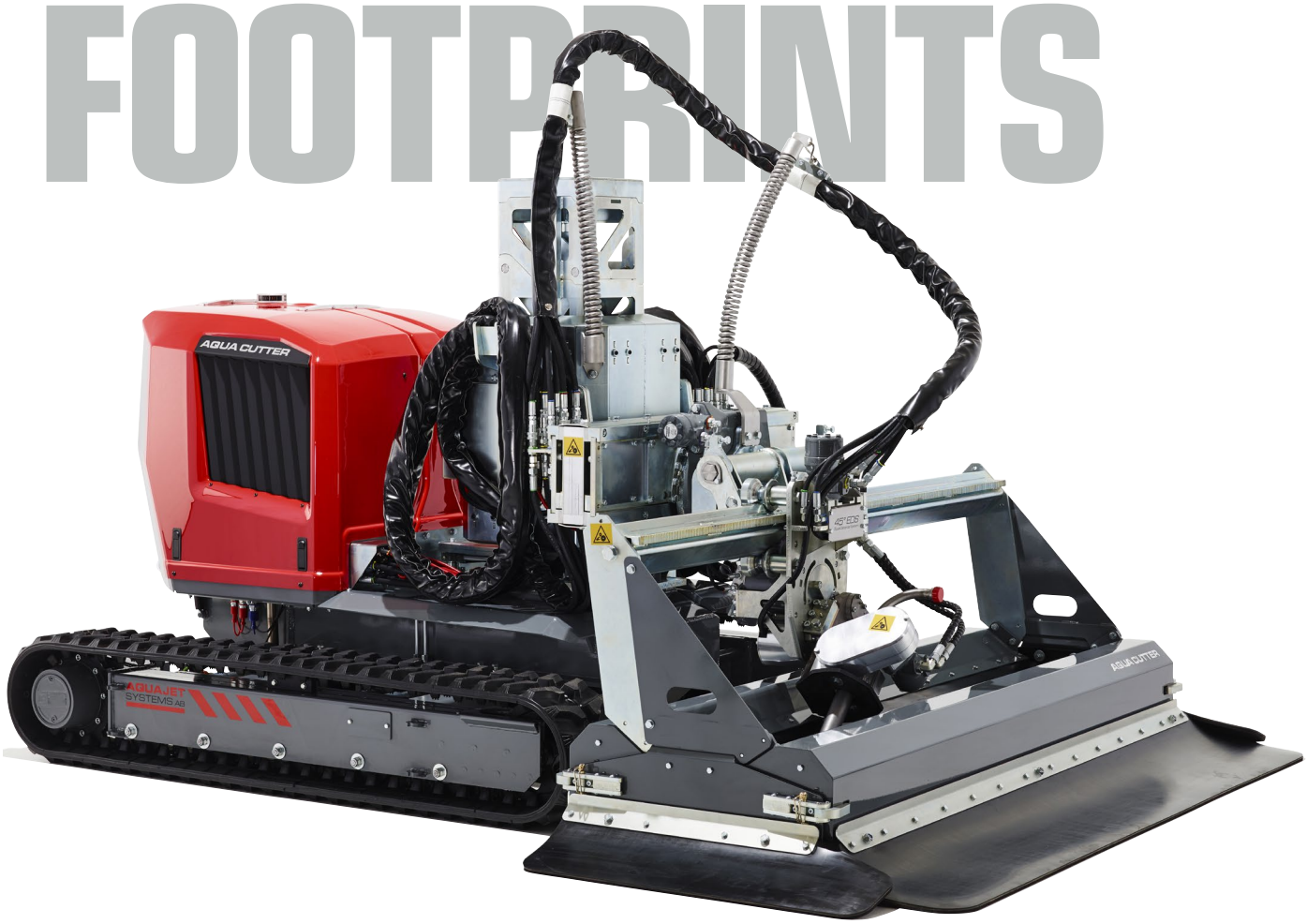

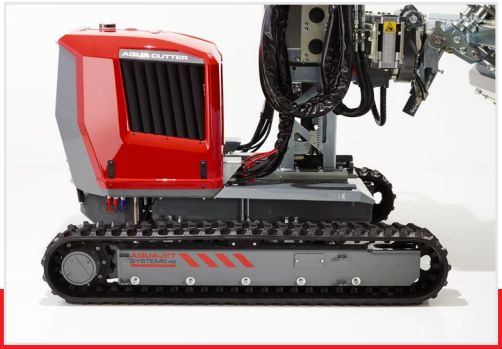

aquajet.se

LARGER FOOTPRINTS

The XL version of the Aqua Cutter 710 features a larger footprint than the original 710.

This means that it can handle more reaction force and has less weight per m².

It has 200 mm wider track base and 170 mm longer tracks which gives it 23% more ground area compared to the original Aqua Cutter 710.

SPECIFICATIONS

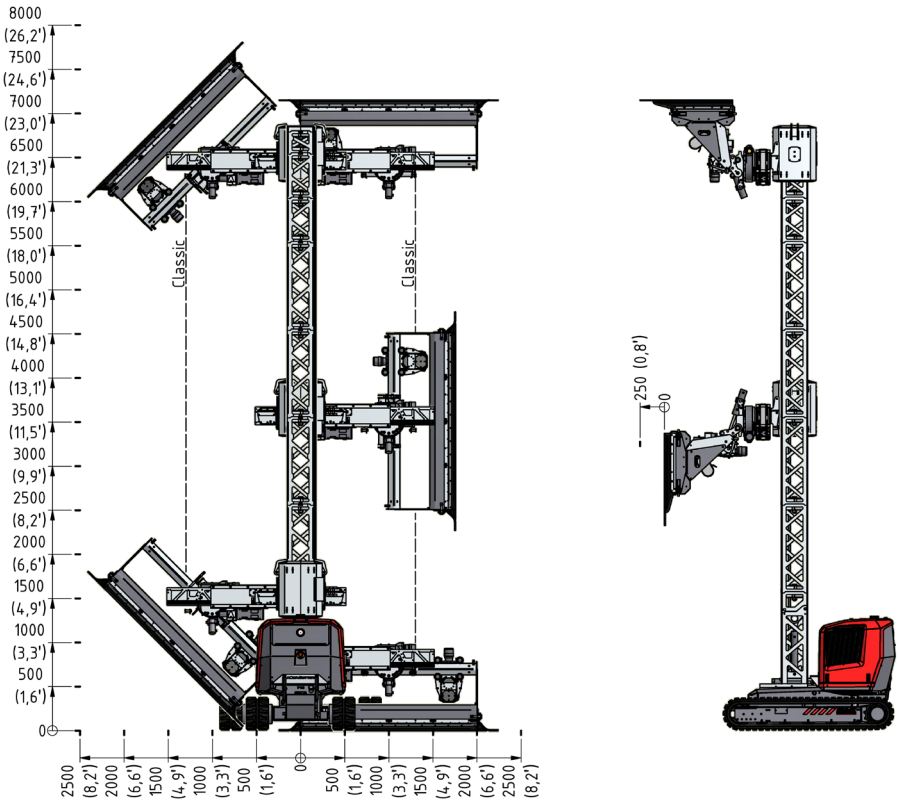

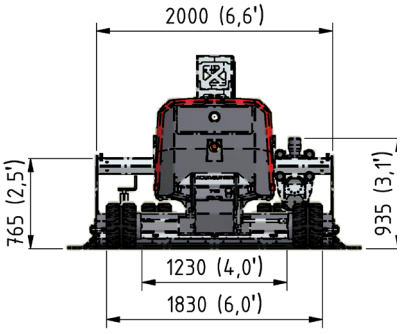

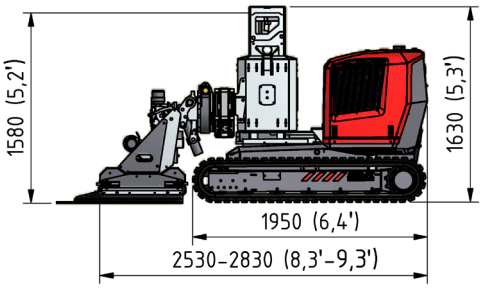

// TECHNICAL DATA CLASSIC

Total weight	2380 kg (5247 lb)
Length	2,53-2,83 m (8,3-9,3 ft)
Min. width	1,23 (4,0 ft)
Track width	1,23-1,83 m (4,0-6,0 ft)
Min. height	1,3/1,6 m (4,2/5,2 ft)
Operating height	7 m (23 ft)
Side reach	1,3 m (4,2 ft)
Lance angle	± 30°
Working width	0-2,45 m (0-8,0 ft)
Working width extended	0-4,45 m (0-14,6 ft)
Drive source	Diesel engine (electric optional) 18kW / 1600-2600 rpm

// TECHNICAL DATA EVOLUTION

Total weight	2430 kg (5357 lb)
Length	2,53-2,83 m (8,3-9,3 ft)
Min. width	1,23 (4,0 ft)
Track width	1,23-1,83 m (4,0-6,0 ft)
Min. height	1,3/1,6 m (4,2/5,2 ft)
Operating height	7 m (23 ft)
Side reach	2 m (6,6 ft)
Side reach extended	2,25 m (7,4 ft)
Lance angle	± 45°
Working width	0-2,45 m (0-8,0 ft)
Working width extended	0-4,45 m (0-14,6 ft)
Drive source	Diesel engine (electric optional) 18kW / 1600-2600 rpm

// COMPATIBLE PRODUCTS

- Hybrid Kit
- Rotolance
- Extension Kit
- Extension sideshift
- CPH - Circular Power Head

// EXAMPLES OF APPLICATIONS

- Bridges
- Hydropower plants
- Tunnels
- Pillars/piles
- Ship cleaning
- Berth/piers
- Parking garages
- Diaphragm walls

AQS003E 1604

Call us: + 46 383 508 01
E-mail us: aquajet@aquajet.se
Visit us: Brunnsvägen 15, SE-570 15 Holsbybrunn, SWEDEN

AQUAJET SYSTEMS AB